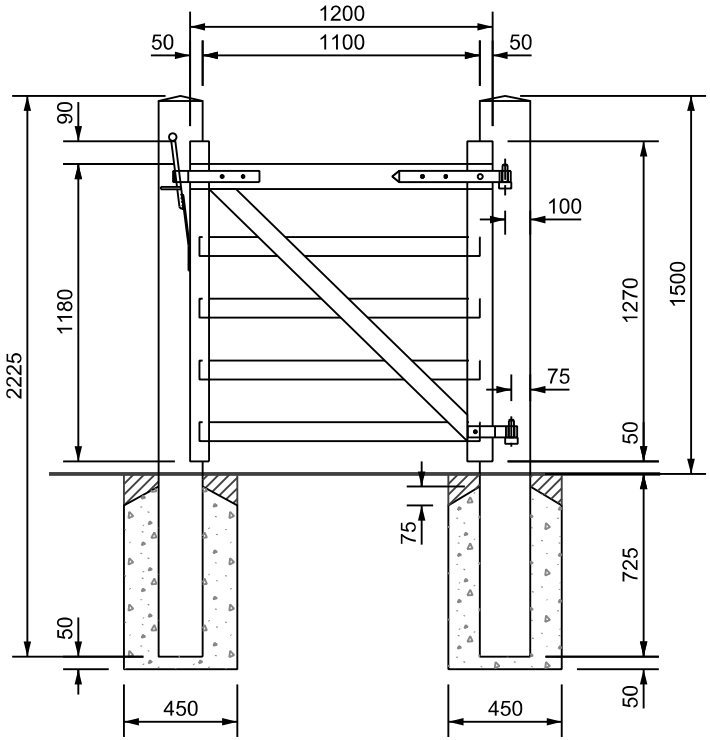

ELEVATION

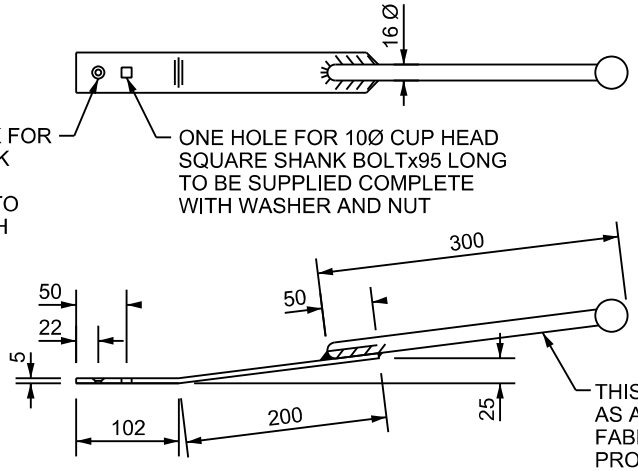

SPRING CATCH

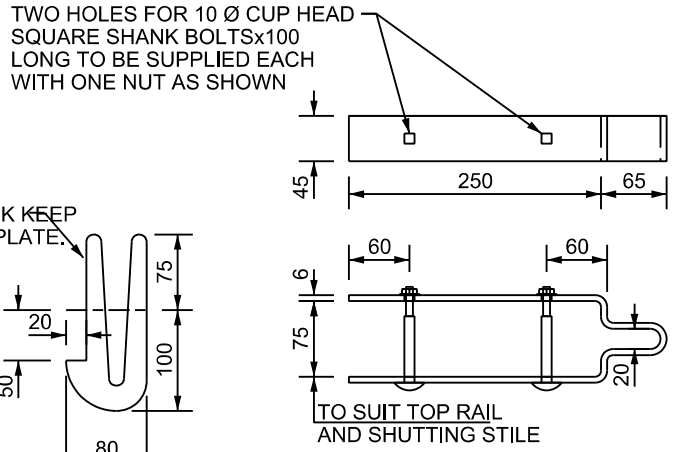

HEAD STRAP

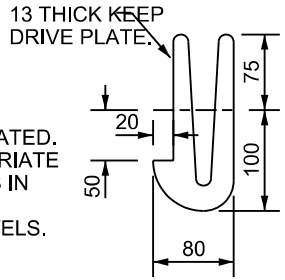

DRIVE CATCH

DESCRIPTION OF TIMBER MATERIALS	SIZES
HANGING POST	200x200x2225 LONG
SHUTTING POST	175x175x2225 LONG
HANGING STILE	100x75
SHUTTING STILE	75x75
TOP RAIL	100x125
UNDER RAILS	75x38
BRACES HOUSED IN TOP RAIL	75x25

NOTES :-

1. ALL DIMENSIONS ARE IN MILLIMITRES UNLESS OTHERWISE STATED.
2. GATES AND GATE FITTINGS SHALL COMPLY WITH THE APPROPRIATE CLAUSES IN CC-SCD-00300 AND ANY FURTHER REQUIREMENTS IN APPENDIX 1/15 OR 3/1.
3. ALL THROUGH TENONS SHALL BE PEGGED WITH 13Ø OAK DOWELS.
4. FOR DETAILS OF FITTINGS FOR HANGING AND FASTENING SEE CC-SCD-00313 AND CC-SCD-00314.
5. THE GATE SHALL OPEN INWARD FROM THE ADJACENT CARRIAGEWAY INTO THE OWNER'S PROPERTY.
6. TIMBER TO BE TREATED IN ACCORDANCE WITH I.S. 435.
7. FITTINGS SHALL BE MILD STEEL GALVANISED TO I.S. EN 10240 WITH THE EXCEPTION OF THE SPRING CATCH WHICH SHALL BE TEMPERED STEEL, PRESET AS SHOWN.

Bonneagar Iompair Éireann
Transport Infrastructure Ireland

ACTIVITY: CC Construction & Commissioning

PUBLICATION TITLE: GATES
TIMBER SINGLE FIELD GATE

STREAM: STANDARD CONSTRUCTION DETAILS (SCD)

HISTORICAL REFERENCE	DOCUMENTATION SET	PUBLICATION DATE	PUBLICATION NUMBER (ACTIVITY / STREAM / DRAWING NUMBER)
RCD/300/12	STANDARDS	JANUARY 2007	CC / SCD / 00312